Network Diagram: Dual LAN NVR Setup

(2 Cameras, 2 POS, Dual LAN NVR Non PoE & NVR POE, IP Text Interface with 4 Port PoE Switch)

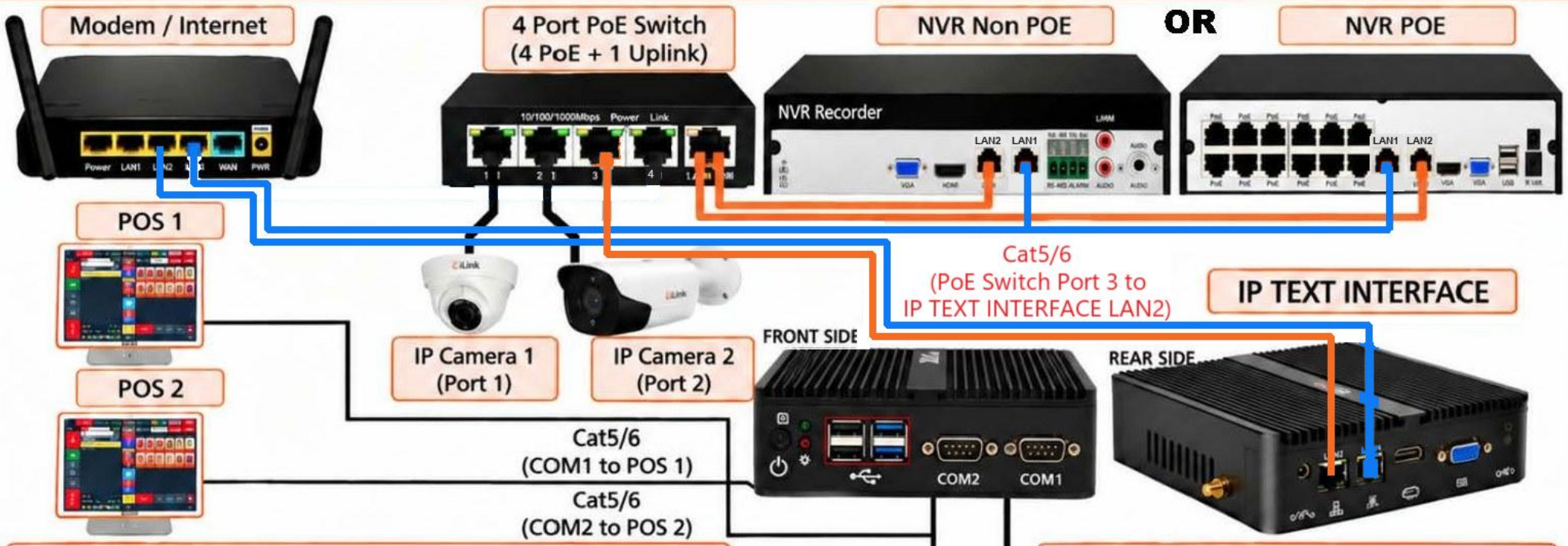

Connection Summary

1	IP Camera 1 → PoE Switch Port 1	Cat5/6 - Black
2	IP Camera 2 → PoE Switch Port 2	Cat5/6 - Black
3	PoE Switch Port 3 → IP TEXT INTERFACE LAN2	Cat5/6 - Orange
4	Modem / Internet → IP TEXT INTERFACE LAN1	Cat5/6 - Blue
5	NVR (Non POE or POE) LAN1 → Modem / Internet	Cat5/6 - Blue
6	NVR (Non POE or POE) LAN2 → PoE Switch Uplink	Cat5/6 - Orange
7	IP Text Interface COM1 (with iTIVO-FC) → POS 1	Cat5/6 - Black
8	IP Text Interface COM2 (with iTIVO-FC) → POS 2	Cat5/6 - Black

Cable Color Legend

- = Modem/Internet to NVR & IP Text LAN1
- = NVR (Non POE) LAN2 to PoE Switch Uplink
- = NVR POE LAN2 to PoE Switch Uplink
- = IP Cameras (Port 1 & 2) only
- = PoE Switch Port 3 to IP TEXT INTERFACE LAN2
- = IP Text Interface COM1 to POS 1
- = IP Text Interface COM2 to POS 2

www.iLinkPro.com

iLink Professionals
Since 1994

1703 Webb Drive Suite C
Norcross GA 30093

Tech Support:
678 971 9999